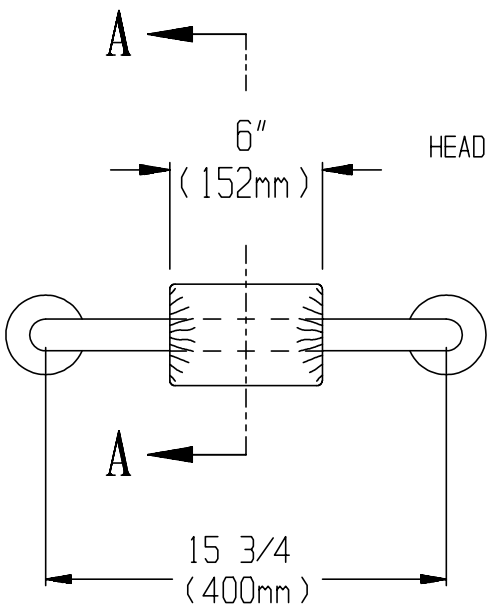

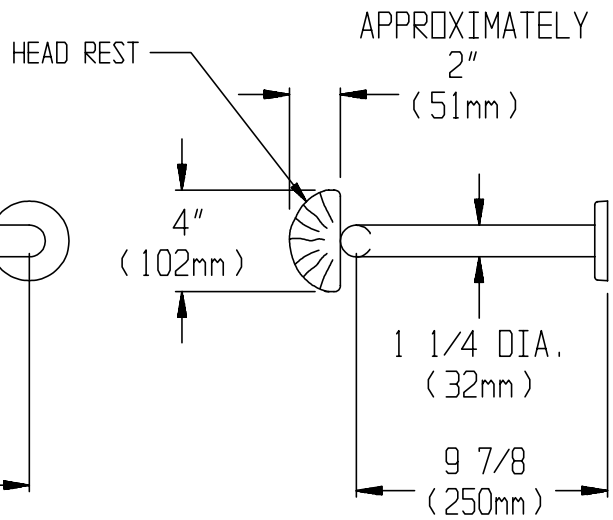

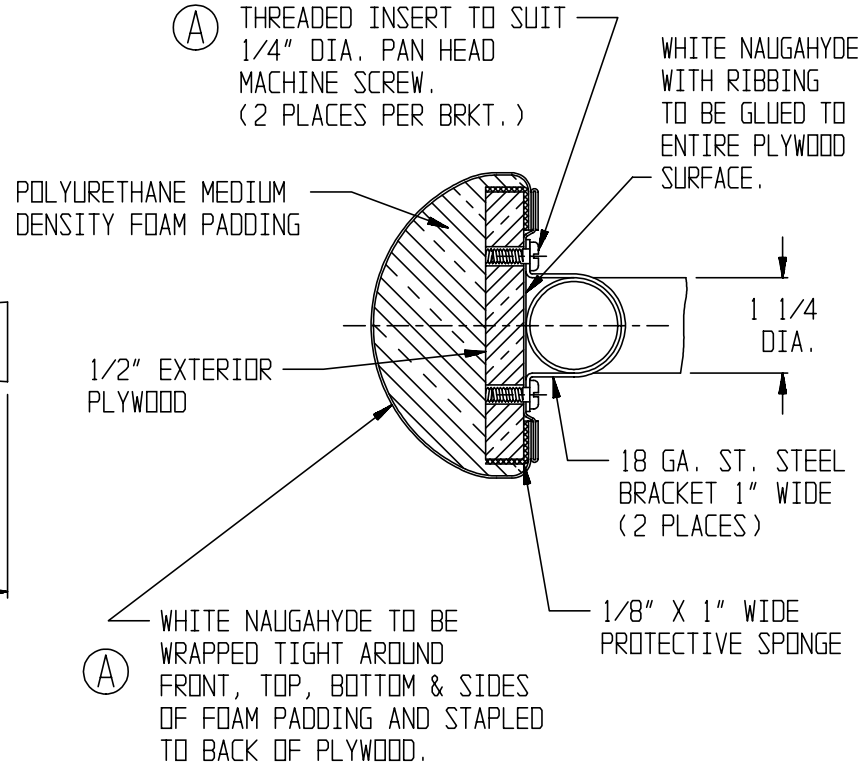

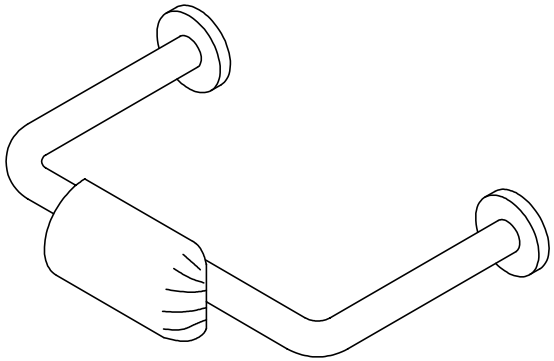

SECTION A-A

NOTES:
1. DIMENSIONS ARE TO THE CENTERLINE OF THE BAR AND FLANGES.
2. SEE #3700 TECHNICAL DATA SHEET FOR MATERIAL AND FLANGE INFORMATION.

LET.	WAS	DATE	R.	CK.	REMARKS
A	CHANGED NAUGAHYDE DESCRIPTION; SPECIFIED 1/4" SCREW.	5-24-00	J.B.		

ASI AMERICAN SPECIALTIES, INC.
441 Saw Mill River Road, Yonkers, NY 10701 (914) 476-9000

HEAD/BACKREST BAR WITH SNAP-ON FLANGES

DRAWN BY	CHECKED BY	SCALE N.T.S.
J.E.B.		A-3777
5-23-00		